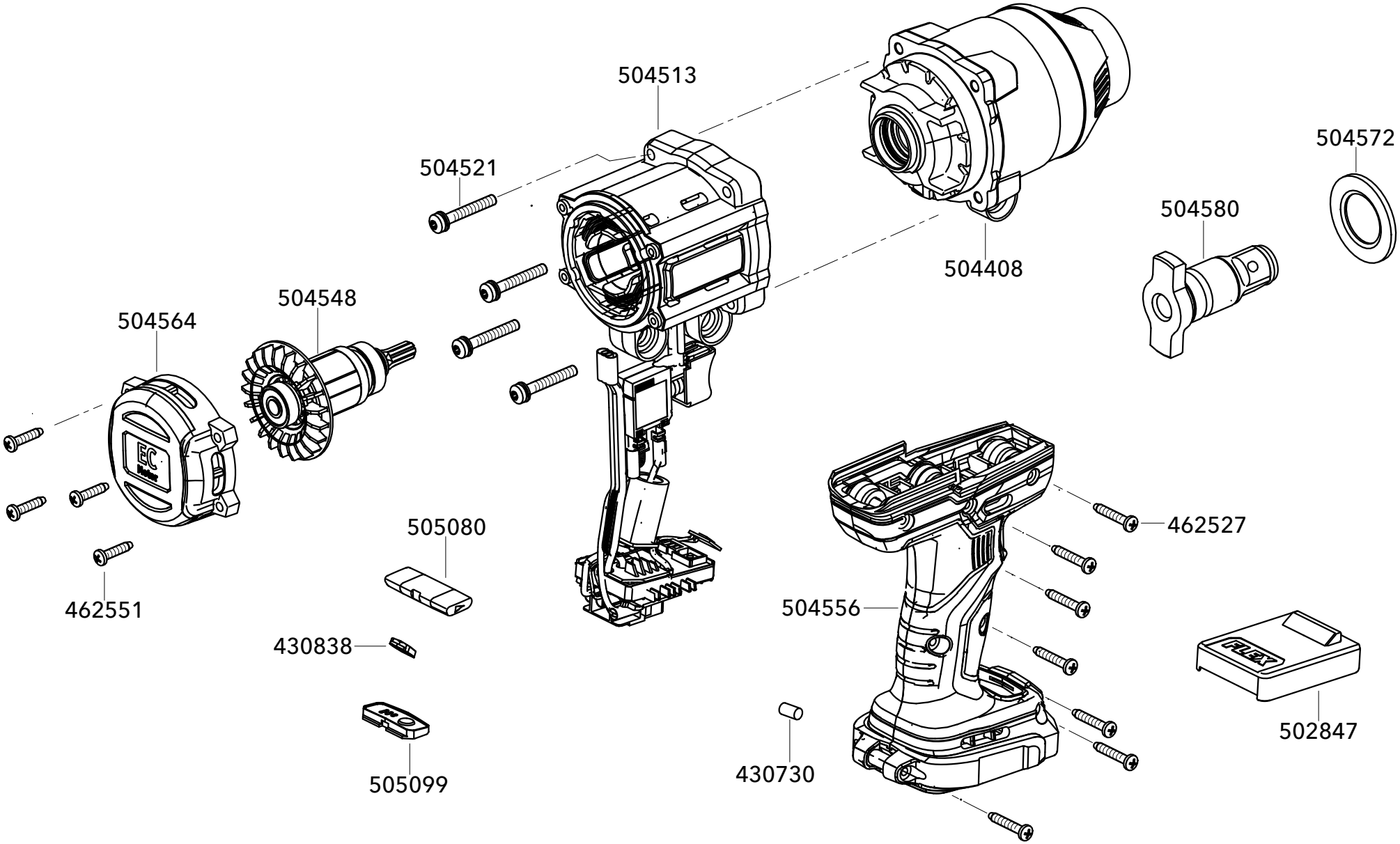

IW 3/4" 18.0-EC

Zeichng.-Nr. 505730 Datum 11-2025
Drawing-no. 505730 Date 11-2025